Instructions

JL-1692 2Door JL Mass Plus Storage Platform

Thank you for purchasing your 2 door JL MASS+ Storage Platform from AAL! We greatly appreciate your trust in our company. We take that purchase and your commitment to us very seriously. If you have any questions along the way, please don't hesitate to give us a call at 385.202.4188.

****Please read these instructions thoroughly before starting this project.****

NOTE: [More important warnings they need to know about the process!]

What's included:

M6x14 Button Head Bolts	8	M8x20 Button Head Bolts	4
M6x14 Flat Head Bolts	60	Foam Tape	72"

****Foam tape is optional, but could be applied between rails and panels if any rattling occurs.****

Step 1 - Teardown and Prep

Before beginning installation of your MASS platform, you will need to remove the rear seat assembly, rear carpet cargo cover, and (4) OEM tie downs. There will be a portion of front carpet that covers the rear cargo area, you can cut that section off, leave it in place and notch it around any portions of the platform structure it may interfere with, or simply fold it forward. Once you have the cargo area stripped down, you can move to Step 2 and begin the installation.

Step 2 - Install Platform Structure

The first step in assembling the platform structure is to install the side rails. These rails go in long ways and will clamp around the four back seat pivot loops in the floor. Before installing, the rail feet need to be attached to the side rails using **Diagram 1** as a guide. *Driver's side shown, but repeat for both sides. Note the orientation of the rails when installing the rail feet. We recommend using a medium strength threadlocker.*

Diagram 1

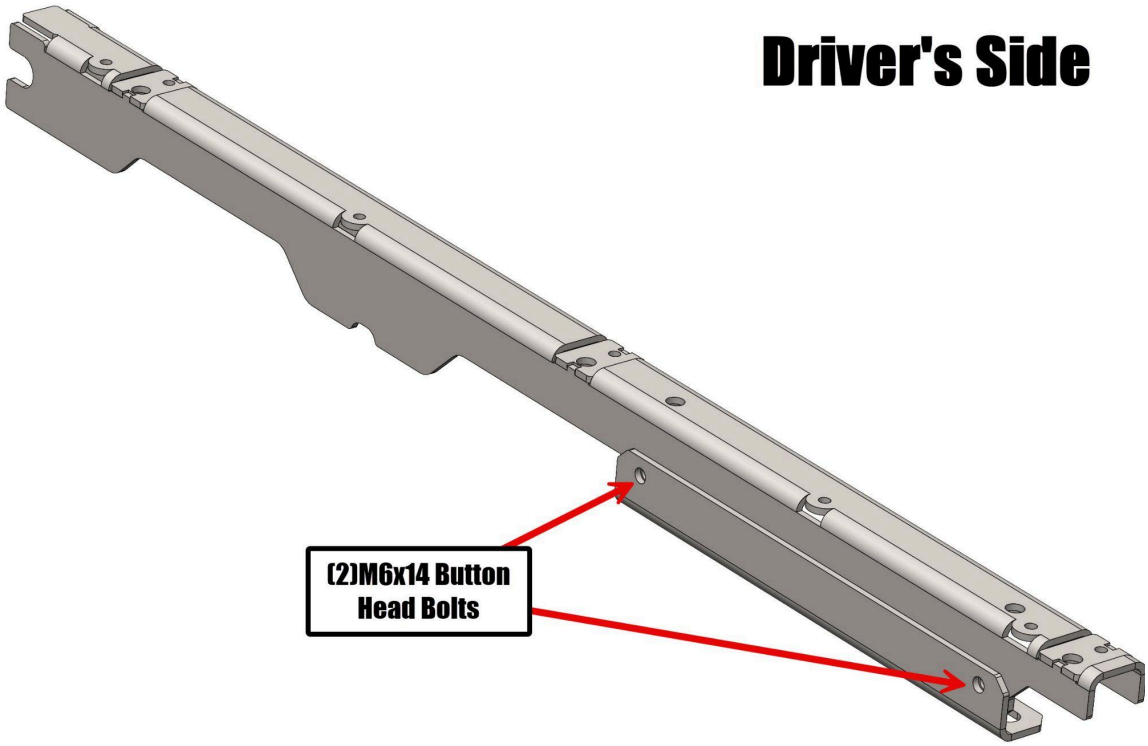

Next, install the side rails into the Jeep by bringing the short and long sides of the rails together through the seat pivot loops in the floor. Use **Diagrams 2 and 3** as a guide. Assembly should look as shown in **Image 1** when complete. *Note: The offset holes in the top of the rail should be positioned toward the <u>outside</u> of the vehicle.*

Once the rails are together under the seat pivot loops, install and tighten (2) M6x14 button head bolts in each assembly as shown in **Diagram 3**. *We recommend using a medium strength threadlocker.*

You can now install (2) M8x20 bolts through each rail foot into the threaded OEM tie down holes in the floor as shown in **Diagram 4**. *Leave these bolts loose for now as the rails should remain free to move around during the installation of the panels. We recommend using a medium strength threadlocker.*

Diagram 2

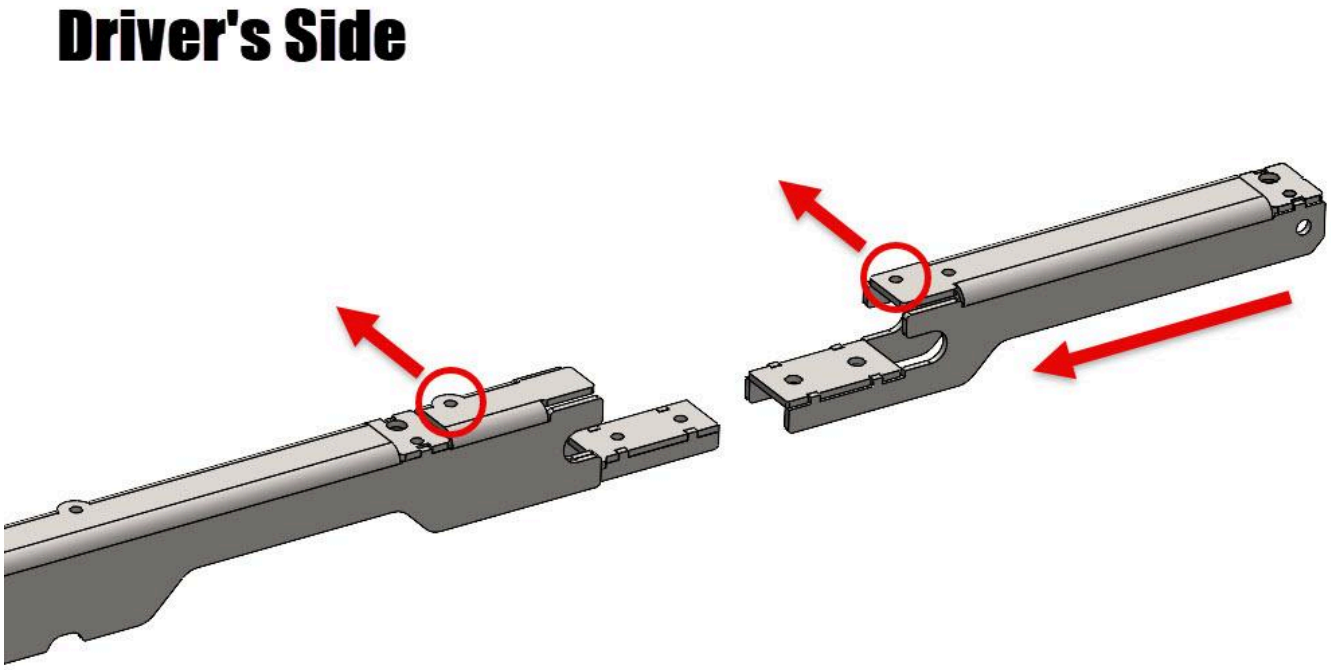

Diagram 3

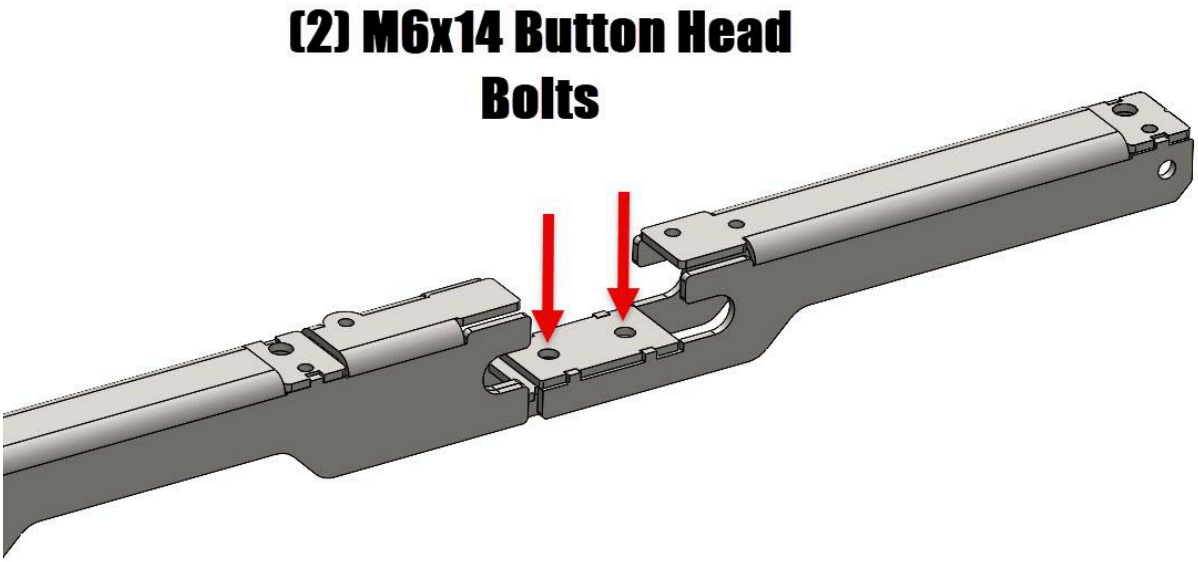

Image 1

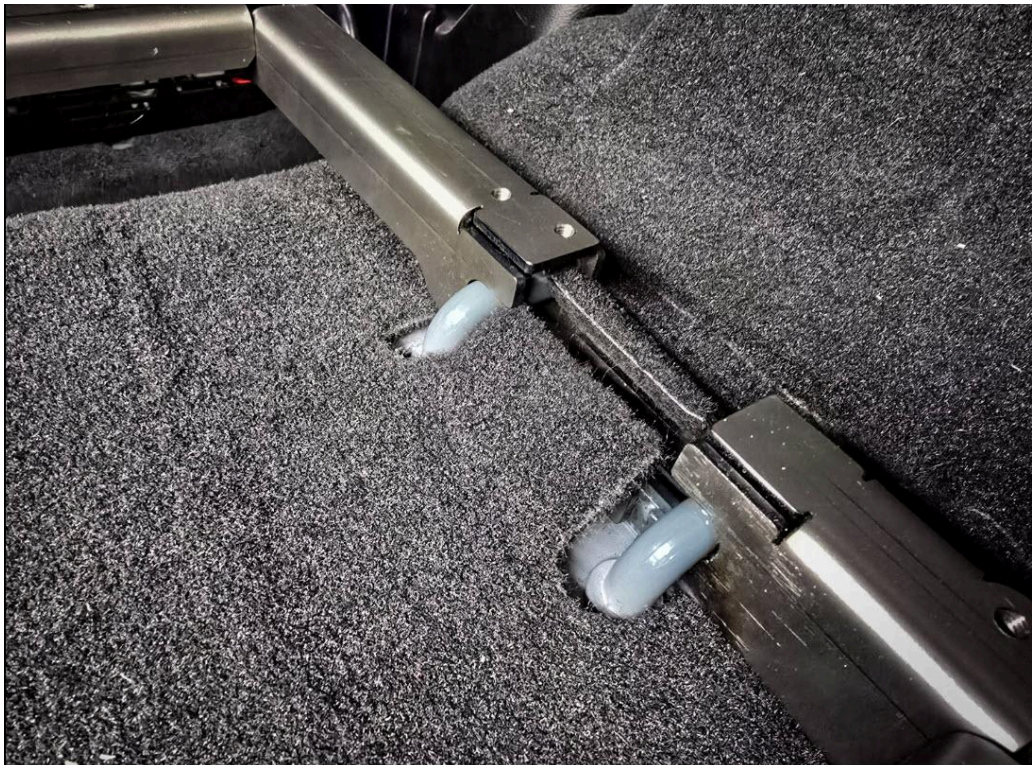

Diagram 4

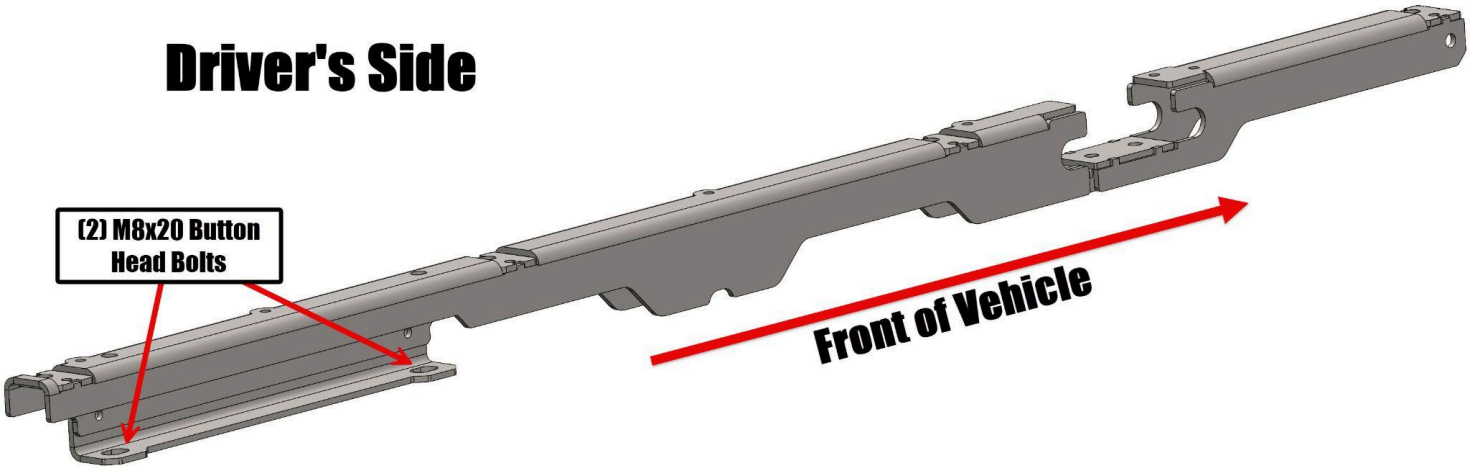

Once the side rails are in and the foot bolts are started, it is time to lay in the cross rails. The cross rails are numbered and have to go in particular places. Using **Diagram 5** as a guide, lay the (4) rails into place on top of the side rails. The panel bolts will fasten the cross rails, so this completes this step.

Diagram 5

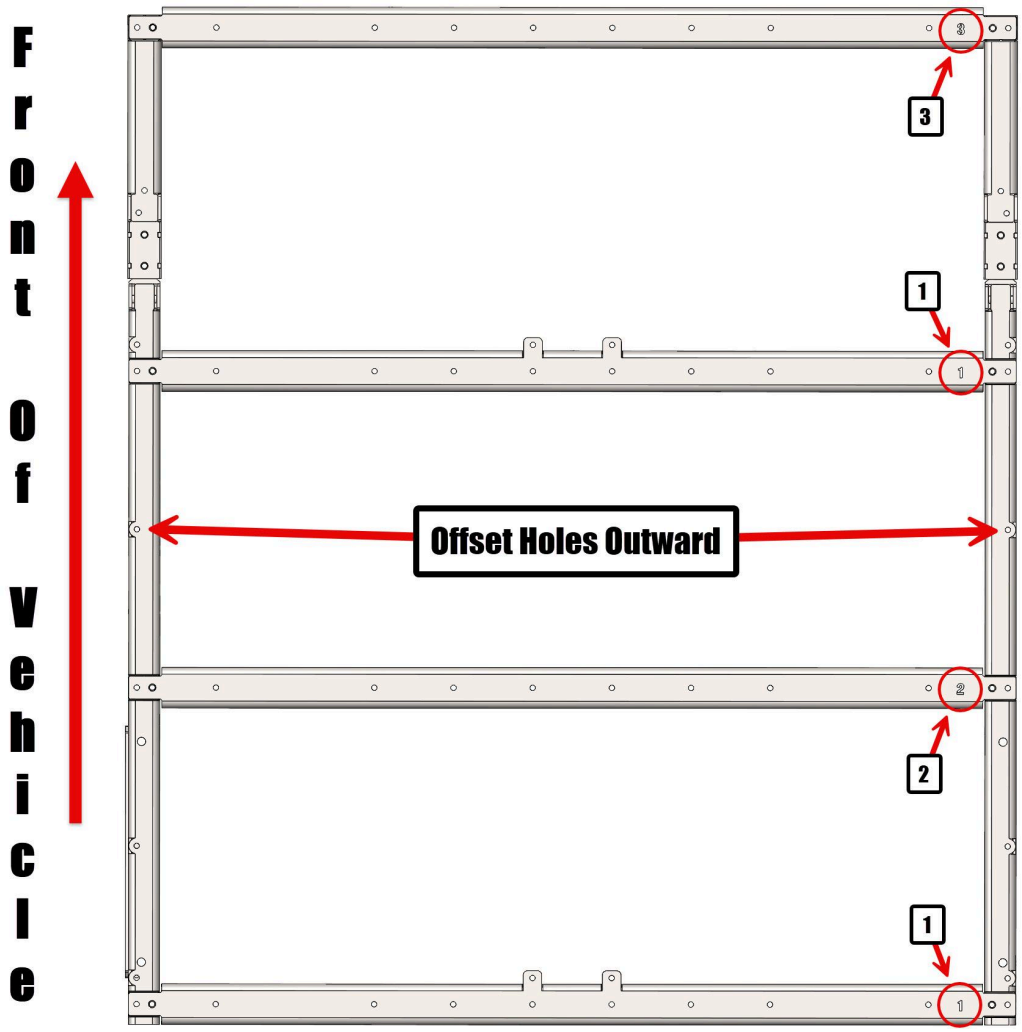

Step 3 - Platform Panel Pre-Assembly

Before installing the platform panels, the nut plates and access door bezels need to be installed. On a clean flat surface, lay out the platform panels upside down. Use **Diagram 6** as a guide, and lay out and fasten nutplates and access door bezels using (14) M4x14 Flat head bolts on each panel. The Flat head bolts will go through the panels into the nutplates in the countersunk locations. *Note: Panels shown upside down, see circled logo cutouts. We recommend using a medium strength threadlocker on all panel bolts.*

Diagram 6

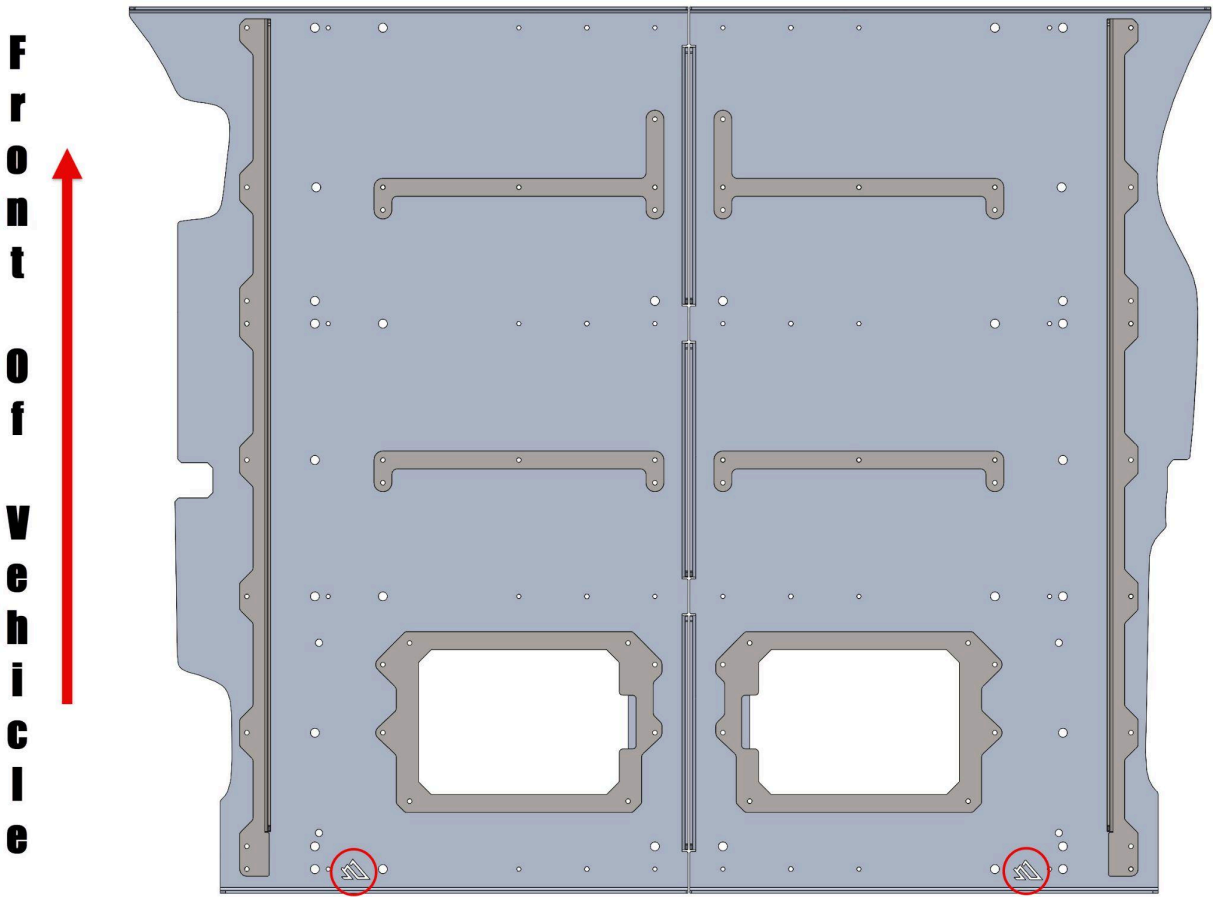

Step 4 - Install Platform Panels

Now that the panels have been assembled, they can be installed into the Jeep.
Using **Diagram 7**, line up panels and install (16) M6x14 flat head bolts in the locations shown on each panel. *We recommend starting all bolts before tightening any, and using a medium strength threadlocker on all panel bolts.*

Diagram 7

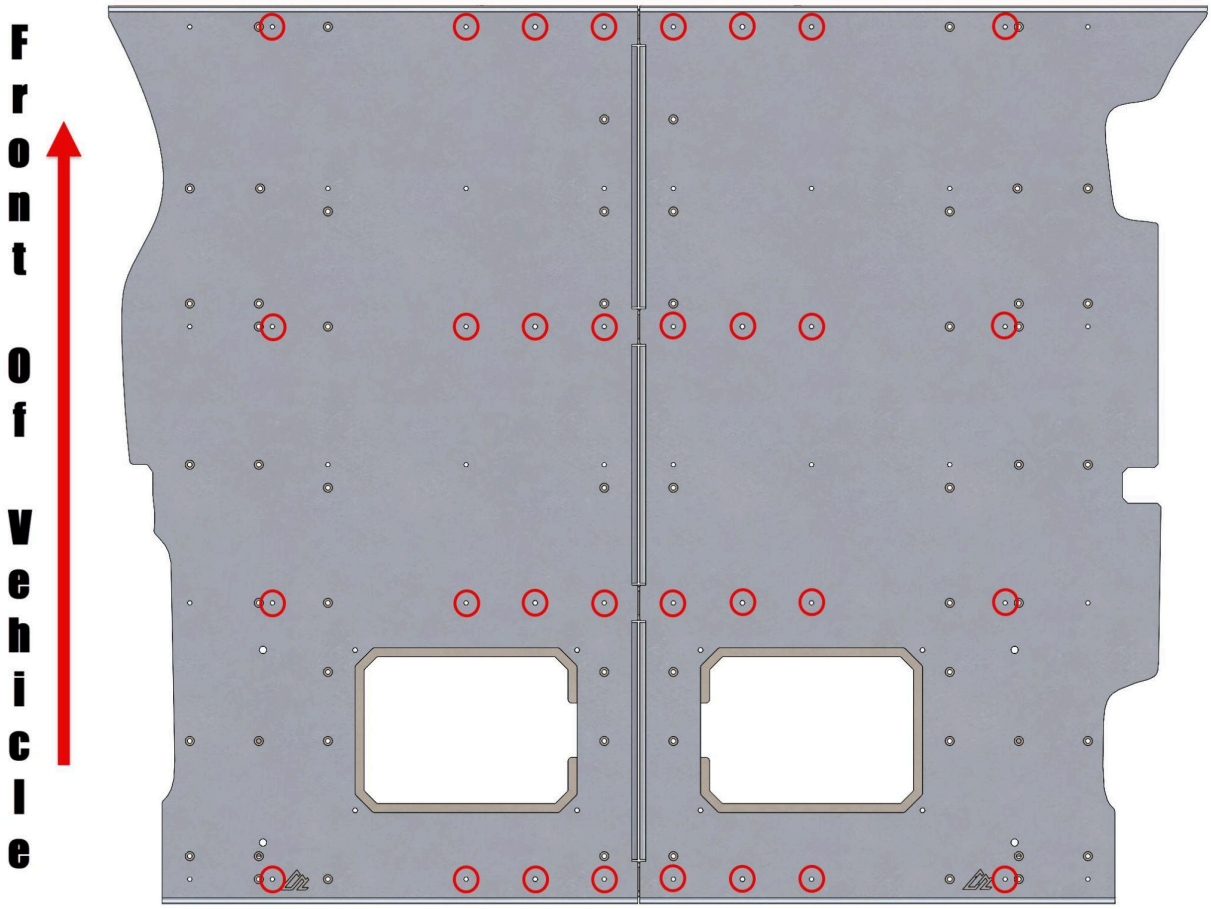

Once all panel bolts are started, they can all be tightened. When all panel bolts are tight, the (4)M8x20 bolts in the side rail feet can now be tightened through the access holes in the panels that are directly above the bolts.

The latches can now be installed into the access doors (If not already installed by us). See **Image 2**.

Image 2

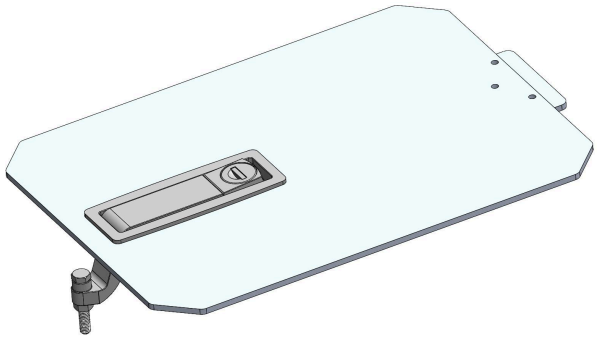

Next, you can install the access doors into your platform as shown in **Image 3** and adjust the latch using an 8mm wrench. This completes the installation!

Image 3

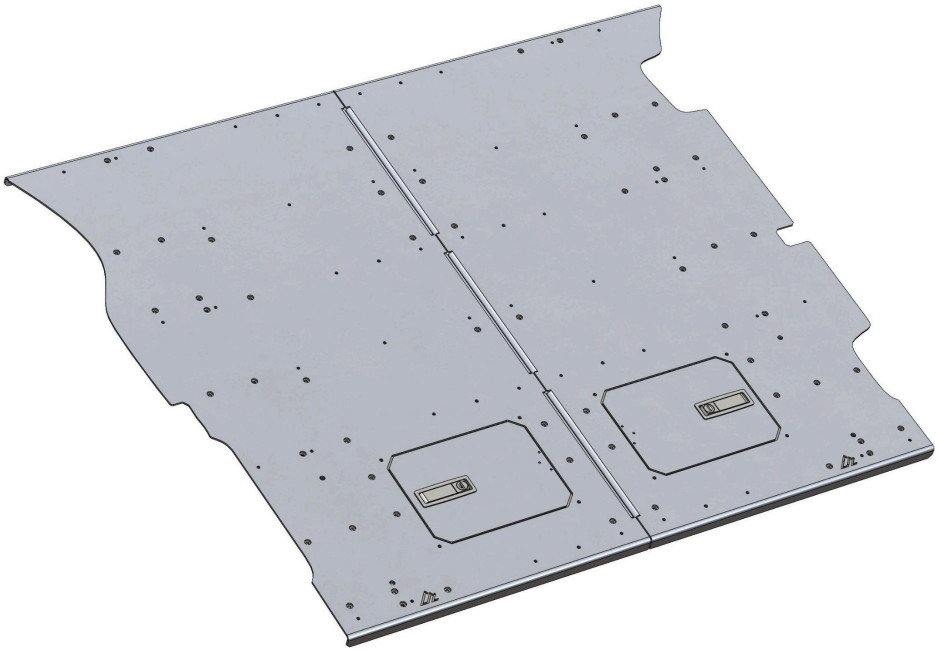

Step 5: Share Your Photos

We take great pride in building our products and we hope that pride extends to you after installing your 2 door JL MASS+ Storage Platform. If you are able to share your photos online (Facebook and Instagram), please tag **@AmericanAdventureLab**. We would love to see how it turned out and give you some reciprocal attention in return!

Congrats! You're all done!

Thank you!

At American Adventure Lab, we strive to improve anywhere we can. If you experience any issues with this product or have any suggestions, please let us know.

If you have any questions or concerns, please don't hesitate to reach out to us at 385.202.4188 or via email at Support@erp.adventurelab.com.